TRULLION

eBook

The 6 Criteria for Evaluating Lease Accounting Platforms in the Age of AI

How to Move from Spreadsheets to Accounting-Trained Agents

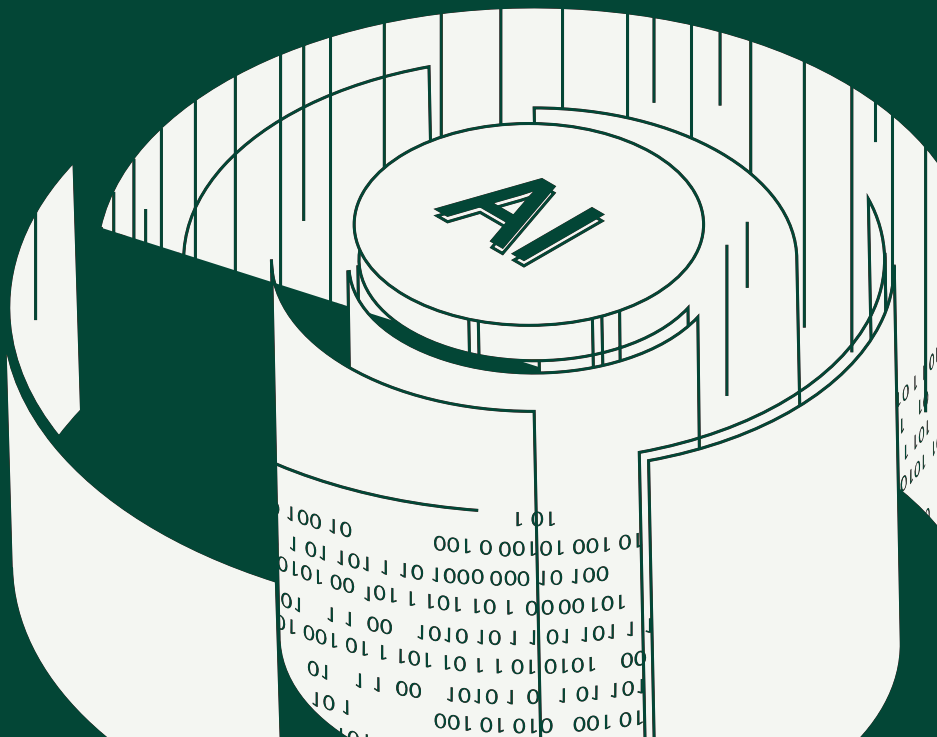

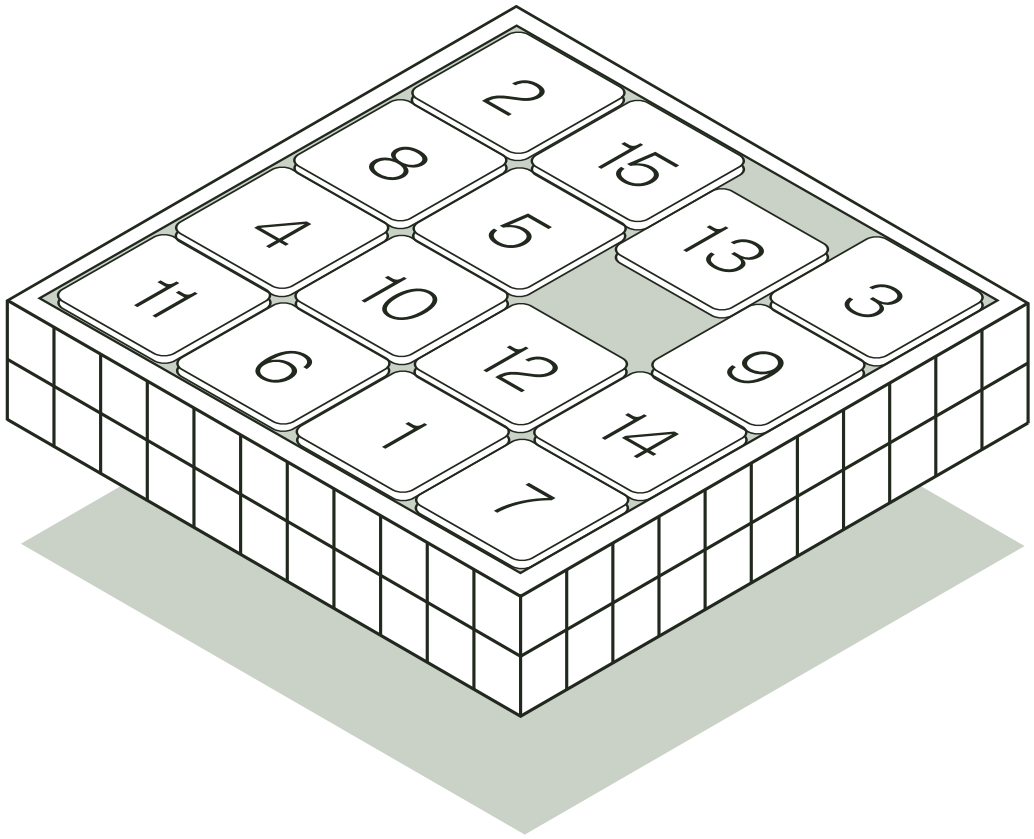

Table of Contents

02. Introduction

05. The 6 Criteria for Evaluating Lease Accounting Platforms

Accounting-Trained AI Agents
Source-Based Audit Trail
Multi-Standard Compliance
Modification & Amendment Handling
ERP & Workflow Integration
Trust, Governance & Control

12. Criteria Checklist: AI Platforms for Lease Accounting

13. Accelerating Lease Accounting with Trullion

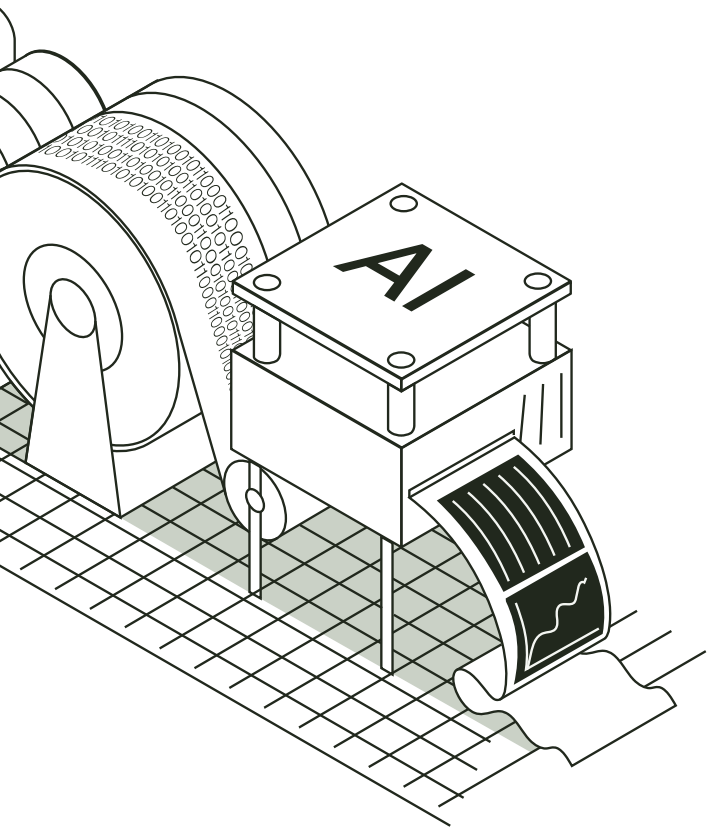

Introduction: Lease Accounting Is Outgrowing the Spreadsheet

Lease accounting is no longer a once-a-year exercise.

ASC 842 and IFRS 16 made right-of-use accounting mandatory years ago, and FRS 102 has extended similar requirements to UK entities. Every one of these standards asks for the same thing: a defensible link between what a contract says and what the financial statements report.

Yet many accounting teams are still running lease accounting through spreadsheets, shared drives, and disconnected trackers. Each new lease means another manual abstraction. Each amendment means another spreadsheet update, done by hand, with no easy way to prove it's correct.

$1.13B

projected size of the global lease accounting software market by 2035, up from $642.52M today (Market Research Future, 2026).

40+

data points IFRS 16 requires teams to capture per lease (PwC)

3–4 hrs

average time to manually abstract a single real estate lease, and 1–2 hours for an equipment lease (RSM) — multiplied across hundreds or thousands of contracts.

While the compliance bar has been set for years, the tools available to meet it haven't kept pace. The result is a widening gap between what lease portfolios require and what the average team's infrastructure can support.

Lease accounting hasn't outgrown the standards. It's outgrown the spreadsheet.

The Problem Isn't AI Adoption. It's What Comes After.

Lease software vendors have moved fast to add AI. Nearly every platform on the market today claims some form of automated extraction or intelligent processing. On the surface, these tools appear to solve lease accounting's oldest problem: too much manual work. In practice, many introduce a new one.

1

Extraction without traceability.

OCR-based tools can scan and digitize a lease, but they can't interpret it. Teams are left manually verifying every extracted field against the source contract — the same work they were trying to eliminate, just moved one step downstream.

2

Abstraction treated as the finish line.

Pulling dates, payment terms, and renewal options out of a PDF is not the same as producing an audit-ready number. Many tools stop at extraction and leave modifications, remeasurements, and disclosures to spreadsheets — exactly where the risk was in the first place.

3

Hallucination and missed clauses.

Generic AI can misclassify a lease term or miss a renewal option buried in a poorly scanned document. Without a confidence check and a path back to the source, those errors flow directly into the financials.

The result? Faster data entry, but not necessarily a more defensible close.

AI that can't be traced back to the lease isn't a shortcut. It's a new source of restatement risk.

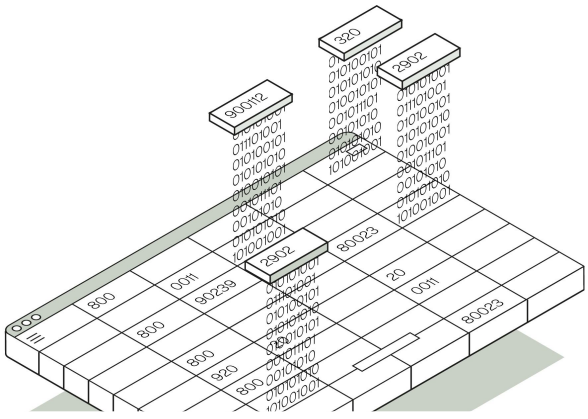

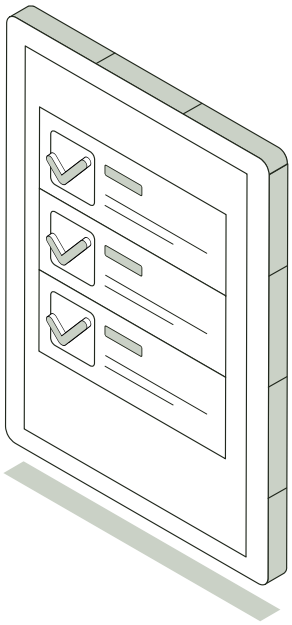

What Modern Lease Accounting Actually Requires

ASC 842 and IFRS 16 are no longer the frontier; they're the baseline. FRS 102 is doing the same across the UK. For any organization operating across borders or reporting frameworks, multi-standard compliance is increasingly the norm, not the exception.

Against this backdrop, three shifts are defining what modern lease accounting requires:

From Spreadsheets → Connected Contract Data

Lease evidence doesn't start in a schedule. It starts in the contract — the payment terms, the renewal options, the termination clauses. Without a direct link between the two, every review becomes a manual reconciliation exercise. A connected platform ties every extracted figure back to the clause it came from, so the schedule and the source document never drift apart.

From One-Time Abstraction → Continuous Change Management

Leases don't stay still. Renewals, terminations, rent escalations, and remeasurements happen throughout the life of a portfolio, often on a rolling basis and not always on schedule. Platforms built around a single abstraction event force teams back into manual work the moment anything changes. Modern platforms treat change as the norm, detecting and processing amendments as they happen.

From Siloed Schedules → Multi-Standard, Audit-Ready Output

Automation without transparency creates risk. Every output must be explainable, traceable, and defensible. The new IIA Standards reinforce this: they require that evidence be sufficient and appropriate, and that the logic connecting inputs to conclusions be documented and reviewable.

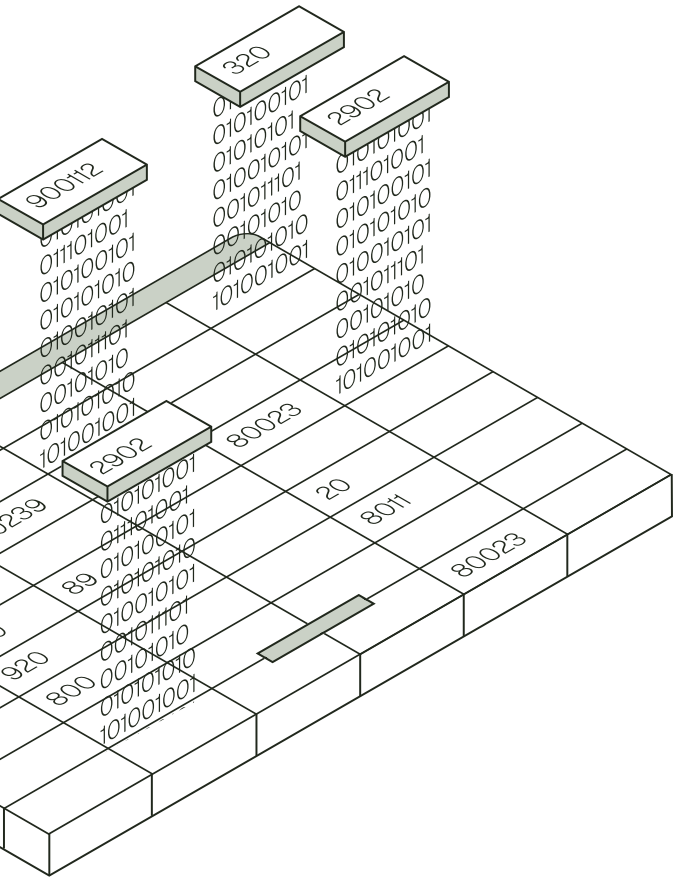

The 6 Criteria for Evaluating Lease Accounting Platforms

Not every solution on the market is built for this reality. Today's options span lease subledgers, real-estate-management suites, ERP-native modules, and generic OCR or AI abstraction tools — each addressing a piece of the problem, few addressing it completely.

The following six criteria provide a practical framework for evaluating whether a platform can truly support compliant, scalable, agent-ready lease accounting — not just automate isolated tasks, but transform how lease data is captured, tested, and defended.

1

Accounting-Trained AI Agents

Purpose-built extraction that understands lease language, not just OCR.

2

Source-Based Audit Trail

Every extracted value, calculation, disclosure, and modification traceable back to the contract.

3

Multi-Standard Compliance

ASC 842, IFRS 16, and FRS 102 supported on one dataset.

4

Modification & Amendment Handling

Renewals, terminations, and remeasurements processed without rebuilding schedules.

5

ERP & Workflow Integration

Journal entries and disclosures flow to the GL without duplicate data entry.

6

Trust, Governance & Control

Security, access controls, and audit logs that meet the standard finance and audit teams expect.

1

Accounting-Trained AI Agents

Reading a contract isn't the same as understanding it.

Lease abstraction has always meant the same task: pull the terms that matter — payment schedules, renewal options, escalation clauses, non-lease components — out of a legal document and into a form accounting can use. What's changed is how much of that work can now be done by machines, and how big the gap is between tools that merely digitize a document and tools that actually understand it.

OCR-based tools can scan and convert lease text into searchable characters, but they can't interpret meaning. They don't know that "the Tenant may extend the term for one additional period of five years" is a renewal option, or that a clause buried on page 40 changes the classification of the whole lease. Teams using these tools are still doing the real abstraction work by hand — just with a cleaner-looking PDF to work from.

True AI-powered abstraction goes further. Agents trained specifically on lease language can interpret clauses in context, extract dozens of pre-built accounting fields, and handle the inconsistent formats, scanned documents, and multiple languages that real lease portfolios contain. PwC puts the burden at over 40 data points per lease under IFRS 16; RSM estimates 3 to 4 hours to manually abstract a single real estate lease, and 1 to 2 hours for an equipment lease. Multiply that across a portfolio of hundreds or thousands of contracts, and the difference between OCR and real abstraction becomes a difference of weeks, not minutes.

> It saves so much time when you're going through a 70 or 80-page property lease contract just to pluck out a few key details that you need for accounting.
>
> Morgan Hoffmann, Group Financial Accountant, Bradken

Here's what to look for:

- **Purpose-built lease NLP, not generic OCR.** The system should interpret clauses in context, not just recognize characters on a page.
- **Dozens of pre-built accounting fields, with room to customize.** Look for 90+ standard fields out of the box, plus the ability to add custom prompts for unique clauses or business terms.
- **Side-by-side source validation**. Every extracted value should be reviewable directly against the clause it came from, not just presented as a finished number.
- **Support for messy, real-world documents.** Scanned PDFs, inconsistent formats, and multiple languages are the norm in most portfolios, not the exception.
- **Abstraction time measured in minutes, not hours.** If a lease still takes hours to process, the tool hasn't solved the actual problem.

Generic OCR can digitize a lease. Accounting-trained agents can abstract one.

2

Source-Based Audit Trail

If a number can't be traced to the lease, it can't be defended.

Extraction solves one problem and can quietly create another. The moment a value is pulled out of a contract and dropped into a schedule, there's a choice to make: keep that value connected to where it came from, or let it become just another number in a spreadsheet. Most legacy processes, and plenty of AI tools, make the second choice by default.

That's a problem the moment an auditor asks a question. "Why is this the lease term?" "Where did this payment amount come from?" Without a direct link back to the source document, answering those questions means re-opening the original contract and re-doing the work the software was supposed to handle. A genuinely auditable platform keeps every field, every calculation, and every journal entry connected to its source document and its full review history, so the answer to "where did this come from" is always one click away.

That same standard has to extend to disclosures, not just balances. A disclosure report that summarizes a portfolio is only as trustworthy as the calculations sitting underneath it. The strongest platforms generate disclosures in one click, and every summarized figure stays tied to the underlying calculation and lease record behind it so a reviewer isn't handed a finished report and asked to take it on faith, but a report they can open up and verify line by line.

That infrastructure should extend to the audit itself, not stop at the report. Rather than routing every question through email or a shared spreadsheet, auditors should be able to work directly inside the platform: reviewing disclosures and the source data behind them, leaving comments on specific figures or clauses, and resolving questions in place. That kind of built-in collaboration is what actually cuts down on audit time — not because the questions stop coming, but because answering them no longer means reconstructing the trail from scratch.

> Auditors appreciate the traceability and accuracy Trullion provides. They've never raised questions as long as our calculations align with what Trullion outputs.
>
> Dionn DuBois, Corporate Accounting Manager, Virgin Voyages

This isn't a nice-to-have for teams under audit scrutiny — it's the entire point. AI that generates a number without showing its work is asking auditors and finance leaders to trust it on faith. AI that shows its work, and gives auditors a way to interrogate it directly, is asking to be checked — and holds up when it is.

Here's what to look for:

- **Click-through from any balance to its source clause.** Every figure on the schedule should link directly back to the language in the contract that produced it.
- **One-click, comprehensive disclosure reports with the underlying calculations attached.** Disclosures should never be a static summary disconnected from the numbers behind them.
- **Built-in auditor collaboration.** Auditors should be able to review disclosures and source data and leave comments directly on specific figures or clauses, inside the platform.
- **Full change history across amendments.** As leases are modified, the system should preserve what changed, when, and why.
- **Confidence-flagged outputs.** Low-confidence extractions should be flagged for human review before they reach the financials, not buried in the average.
- **Reproducible logic, not a black box.** The path from contract to number should be consistent and explainable, not a one-time judgment call that can't be re-created.

3

Multi-Standard Compliance

One lease population, multiple reporting obligations.

Very few organizations report under a single standard anymore. A US-listed company with international subsidiaries may need ASC 842 and IFRS 16 applied to the same portfolio. A UK subsidiary of a global business may need FRS 102 layered on top of whatever the parent company reports. In every case, it's the same underlying leases — just viewed through a different compliance lens.

This is exactly the challenge HMD Global (Nokia) faced converting from Finnish GAAP to IFRS across more than 30 countries and multiple currencies. As the team's Senior Finance Manager put it, "30, 40 leases with multiple currencies might get complex" — and that's before accounting for a second reporting standard on top of the first.

Maintaining separate schedules per standard, reconciled by hand, is exactly the kind of manual work that doesn't scale. A platform built for multi-standard compliance applies every relevant standard to the same underlying dataset, so the same lease produces consistent, defensible output no matter which framework is asking the question.

> Without Trullion we would have spent at least twice as much time on lease accounting.
>
> Ville Räsänen, Senior Finance Manager, HMD Global (Nokia)

Here's what to look for:

- **Native support for every standard the organization reports under.** ASC 842, IFRS 16, and FRS 102 should be built in, not modules bolted on after the fact.
- **Consistent treatment of the same lease across standards.** The underlying contract data shouldn't need to be re-entered or re-interpreted for each framework.
- **Disclosure reports generated directly from the schedule.** Reports should tie back to the same source data used for the journal entries, not be assembled separately.
- **Multi-currency handling built in.** Global portfolios need this as a core capability, not a workaround.

The standard changes. The lease doesn't. Your platform should treat it that way.

4

Modification & Amendment Handling

Leases don't stay still, and neither should the schedule.

A lease portfolio is never static. Renewals get exercised, terminations happen early, rent escalates on schedule, and the scope of an agreement changes mid-term. Information about these changes doesn't always arrive when it should, either — a modification signed six months ago might not reach the accounting team until the current period's close.

Platforms that require a full manual rebuild every time a lease changes push all of that risk back onto the accounting team. Every amendment becomes a new project: re-abstract the lease, rebuild the schedule, re-check the math. At any meaningful portfolio size, that work compounds fast.

The better approach treats change as routine. Detect what's changed in the amendment, flag only the fields that are affected, and update the schedule — without touching or re-verifying the parts of the lease that didn't change. And when a modification shows up late, the system should be able to catch the schedule up to where it should already be, rather than treating a backdated change as an exception to work around.

> The lease catch-up option has been quite a relief for us because previously we would have had to manually process through any of these sorts of adjustments.
>
> Morgan Hoffmann, Group Financial Accountant, Bradken

Here's what to look for:

- **Automatic detection of amendment terms.** The system should identify what changed in a modification without a full manual re-review.
- **Remeasurement without rebuilding from scratch.** Only the affected parts of the schedule should update; the rest should stay untouched.
- **Support for late-arriving or backdated modifications.** "Catch-up" processing should be built in, not a manual workaround.
- **Full version history preserved.** Every amendment should be visible alongside the original lease terms, not overwritten.
- **Consistent treatment across change types**. Renewals, terminations, and scope changes should all follow the same reliable process.

A schedule that can't keep up with the lease isn't tracking it. It's guessing.

5

ERP & Workflow Integration

Compliance doesn't end at the schedule. It ends at the ledger.

A lease accounting platform can get every calculation right and still fail the team using it, if the output never makes it cleanly into the general ledger. Journal entries that have to be re-keyed, disclosures that have to be reformatted, account mappings that shift from period to period — all of it recreates the manual risk the platform was supposed to remove.

The strongest platforms treat integration as core functionality, not an afterthought. Approved journal entries post directly to the ERP. Account mappings stay consistent across entities and reporting periods. And critically, the platform runs alongside the systems already in place rather than requiring teams to rip out and replace what's already working.

That's precisely the model HMD Global valued when evaluating vendors. Rather than embedding lease logic directly inside a large ERP like SAP or Oracle — a heavier, costlier path — the team chose a platform that could run its own calculations and hand off clean output, with no added burden on IT.

> It's a completely separate tool and separate system where you run the reports and then you upload it to the ERP... We didn't need to have a heavy involvement from our IT team and no costly implementations between the systems.
>
> Ville Räsänen, Senior Finance Manager, HMD Global (Nokia)

Here's what to look for:

- **Direct integrations or API/CSV connections to major ERPs and general ledgers.** Output should flow in, not require manual re-entry.
- **Consistent account mapping across entities and periods.** The same lease should map to the same accounts every time, without manual reconciliation.
- **An execution layer, not a rip-and-replace.** The platform should work alongside existing finance systems, not force a systems migration to adopt it.
- **Structured, import-ready exports.** Reports and journal entries should be ready to load with no manual reformatting.

The best lease accounting platform is the one your ERP never has to fight.

6

Enterprise-Grade Trust, Governance & Control

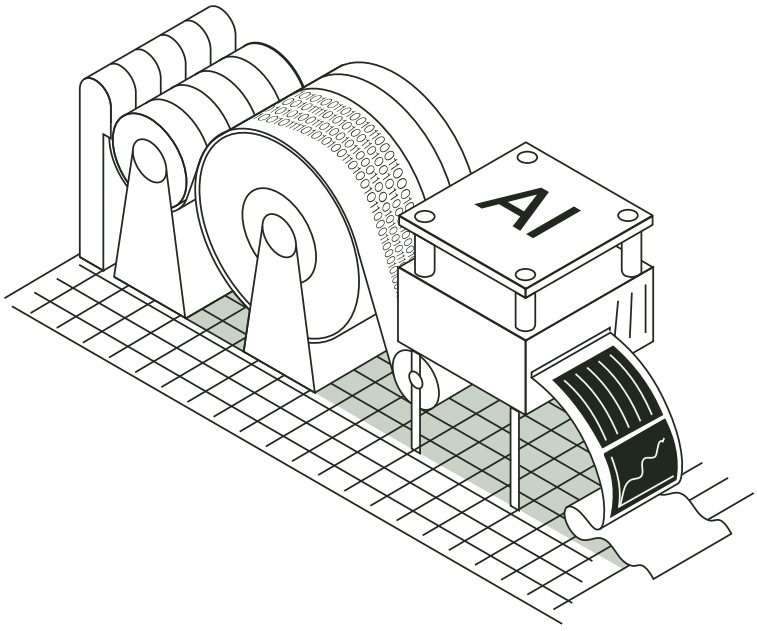

Trust isn't a feature. It's infrastructure.

Lease data touches contracts, vendor terms, and financial statements — sensitive information by any measure, and increasingly the direct source of audited disclosures. A platform handling this data needs to meet the same governance standard that finance and audit teams are held to themselves, not a lighter one.

This goes beyond a security badge on a vendor's website. It means a complete, reliable record of who accessed what, who changed what, and when — available on demand, not reconstructed after the fact. It means access controls that reflect how a finance organization is actually structured, with different levels of visibility for preparers, reviewers, and external auditors. And it means the platform can demonstrate all of this clearly, the same way the accounting team is expected to demonstrate its own controls.

For any finance leader evaluating a platform that will touch lease data feeding directly into the financials, the right question isn't just "is this tool secure?" It's: "would I be comfortable explaining how this platform handles our data if our audit committee asked?"

Here's what to look for:

- **Strong security standards as a baseline.** SOC 2 and relevant privacy compliance should be table stakes, not a differentiator.
- **Robust audit logs and version control.** Every action and change should be recorded, ensuring full accountability and reproducibility.
- **Role-based access controls.** SSO and provisioning support should let preparers, reviewers, and auditors each see exactly what they need — no more, no less.
- **Configurable data retention and workspace locking.** Post-close locking and clear retention policies protect the integrity of closed periods.
- **Clear data isolation.** Multi-entity organizations need confidence that data stays properly segmented across business units.

If a platform can't govern its own data, it has no business governing yours.

Criteria Checklist: AI Platforms for Lease Accounting

1 Accounting-Trained AI Agents

- Purpose-built lease agents, not generic OCR
- 90+ pre-built fields, with custom-prompt flexibility
- Side-by-side source validation
- Support for scanned, messy, multi-language documents
- Abstraction time measured in minutes, not hours.

2 Source-Based Audit Trail

- Click-through from balance to source clause
- One-click disclosures with underlying calculations attached
- Built-in auditor collaboration (comments, in-platform review)
- Full change history across amendments
- Confidence-flagged outputs for human review

3 Multi-Standard Compliance

- Native ASC 842, IFRS 16, FRS 102 support
- Consistent treatment of the same lease across standards
- Disclosure reports generated from the same source data
- Built-in multi-currency handling

4 Modification & Amendment Handling

- Automatic detection of amendment terms
- Remeasurement without full schedule rebuilds
- Support for late-arriving/backdated modifications
- Full version history preserved
- Consistent treatment across change types.

5 ERP & Workflow Integration

- Direct ERP/GL integrations or API/CSV connections
- Consistent account mapping across entities and periods
- Execution layer alongside existing systems, not a replacement
- Structured, import-ready exports

6 Trust, Governance & Control

- SOC 2 / relevant security certifications
- Robust audit logs and version control
- Role-based access controls, SSO/provisioning
- Configurable retention and post-close locking
- Clear data isolation

Accelerating Lease Accounting with Trullion

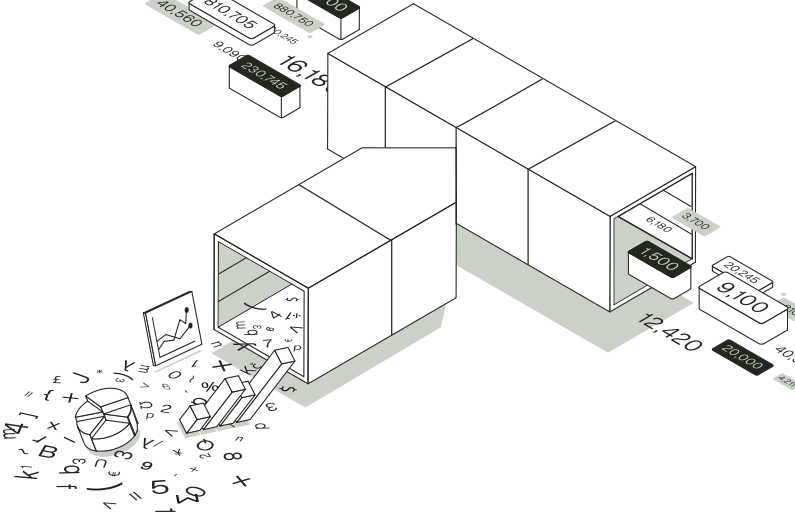

Lease accounting is shifting from spreadsheet-driven fieldwork to a connected, AI-powered workflow. Trullion is built for teams making that transition — bringing contract data, modifications, and compliance reporting together in a single platform for ASC 842, IFRS 16, and FRS 102.

With Trullion, teams can:

- Extract lease data from contracts in minutes, with AI trained specifically on lease language
- Trace every value, calculation, and journal entry back to its source contract
- Generate one-click, comprehensive disclosures with the underlying calculations attached, and give auditors a built-in workflow to review and comment without leaving the platform
- Process modifications and amendments automatically, without rebuilding schedules
- Report across ASC 842, IFRS 16, and FRS 102 from one connected dataset
- Post directly to the ERP, with consistent account mapping across entities

Critically, Trullion works with existing ERPs and finance systems — not as a replacement, but as an execution layer that makes what teams already do faster, more consistent, and more defensible.

Bradken

- 25% increase in speed of financial answers since implementation
- Reporting and calculation accuracy significantly improved within weeks
- Workpapers 80% completed instantly after uploading data

Read more

Virgin Voyages

- Lease reconciliation cut from over 5 hours to under 30 minutes
- Monthly lease review time reduced from hours to about 20 minutes
- Auditors have never raised questions on Trullion-sourced calculations

Read more

TRULLION

The future of lease accounting isn't just automation, it's Auditable AI.

Book a demo at trullion.com

For more information www.trullion.com info@trullion.com